SR80/185T-24V - SR80 SIDE-POWER
Retractable thruster, 24V

Spare parts (valid from 2017-06-30)

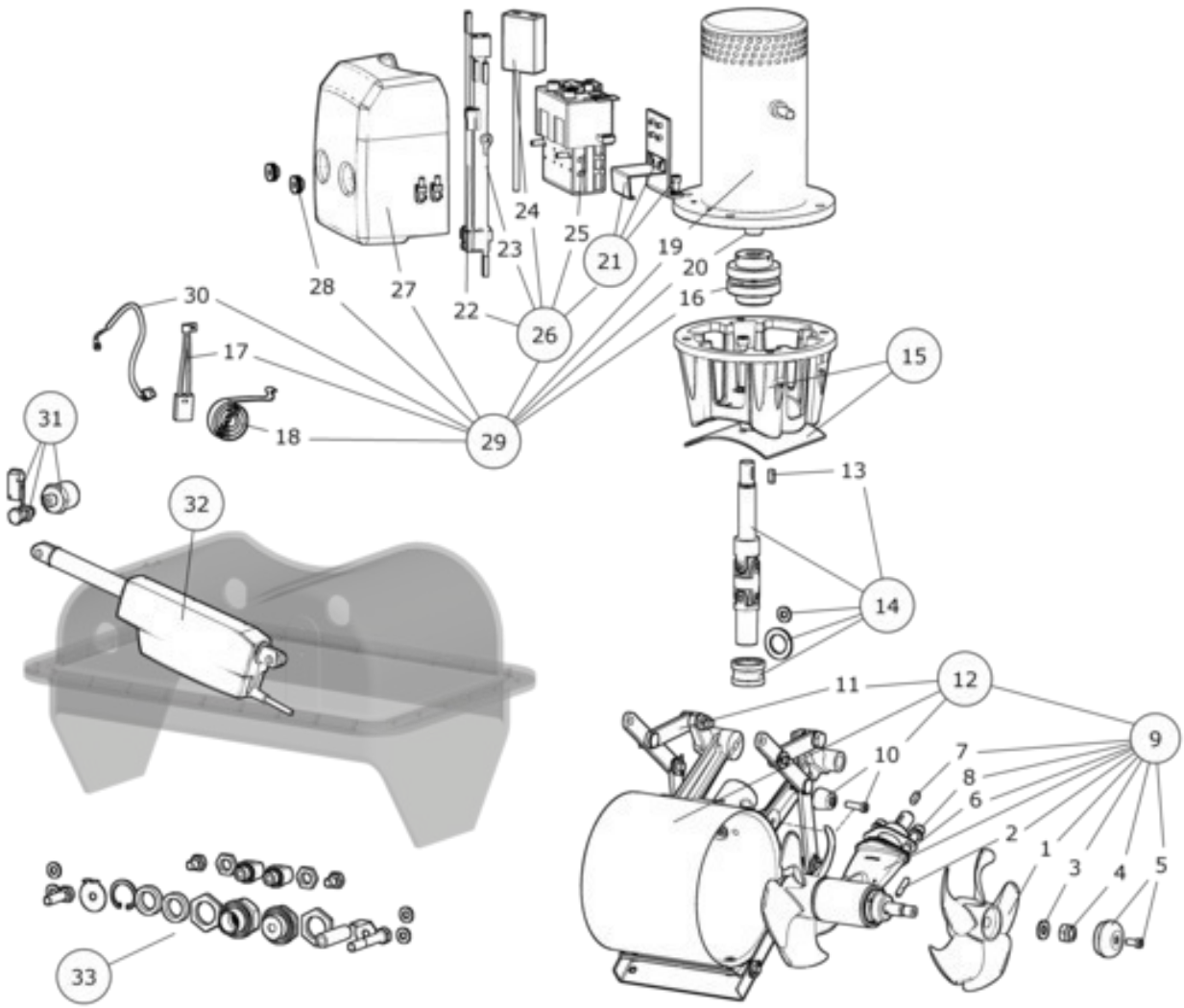

SAILTEC GmbH • Hasselbinnen 28 • D-22869 Schenefeld
Tel: +49-(0)40-8229940 • Fax: +49-(0)40-8304279
E-Mail: info@sailtec.de • Internet: www.sailtec.de

#	Description	Product
1	Propeller	7 1261 - Prop ø185/5bl Q-Prop Composite
2	Propeller drivepin	6 1241 - Drivepin for propeller 5mm
3	Propeller washer	7 1181 - Propeller washer
4	Locknut	4 1260 - Locknut
5	Anode	7 1190 A - Alu anode SE60/80/100
6	Gasket	7 1314 - Pakning 1,5mm SE80/100 oljef
7	Driveshaft key	6 1440 - Key for flex coupl 7HP/SP75/95
8	Gearleg bolt	7 1080 - Gearleg bolt SP75/95
9	Complete gearleg	8 0601 - Gearleg compl SE80/100
10	Anode retract mechanism	6 1180
11	Support stay kit	6 2200 - Support stay set Retract
12	Complete SR retract mechanism	6 2199 - Retract Ø185 Support set
13	Key for shaft	10 1440 - Key for drive shaft SP95/125++
14	Complete shaft kit	SM-125229 - Ledd komplett m/kile,tetn,sege
15	Motor bracket complete	125230 - Motorbrakett kitt SR80/100
16	Complete flexible coupling	7 1462 - Flexible coupling 16/20mm
17	Brushes for motor (kit)**	**
18	Brush springs for motor (kit)**	**
19	Electric motor	N/A
20	Key for eletric motor shaft	10 1440 - Key for drive shaft SP95/125++
21	Solenoid bracket kit	6 0136 - Solenoid bracket kit SR80
22	Internal wiring loom	6 1227 - Internal wiring loom SR80/100
23	Internal wiring loom	6 1223 - Internkobling fartsstyring
24	Electronic control unit	6 1242 - El. control box retract
25	Solenoid	41371243 - Solenoid compl SE80-170 24V
26	Complete solenoid kit	6 0132 24 - Solenoid kit SR80/100 24V
27	Solenoid Cover	6 2025 - Solenoid cover, SE80T
28	Nut for solenoid cover	6 8810 - Nut for solenoid cover
29	Complete electric motor assembly	6 0104 24 - Electromotor complete SR80 24V
30	Temp switch*	*
31	Sensor kit	6 2104 - End stop sensor kit 24v
32	Actuator kit	6 2301 - Actuator retract, complete 24V
33	Complete sealing SR kit	125224 - Bussing kitt SR80/100

The installer alone has responsibility for the installation of the spare parts. Side-Power only warranty the spare parts supplied only.

The information given in the document was correct at the time it was published. However, Sleipner Motor AS can not accept liability for any inaccuracies or omissions it may contain. Continuous product improvement may change the product specifications without notice. Therefore, Sleipner Motor AS can not accept liability for any possible differences between product and document.